Longitudinal vibrations in one dimension

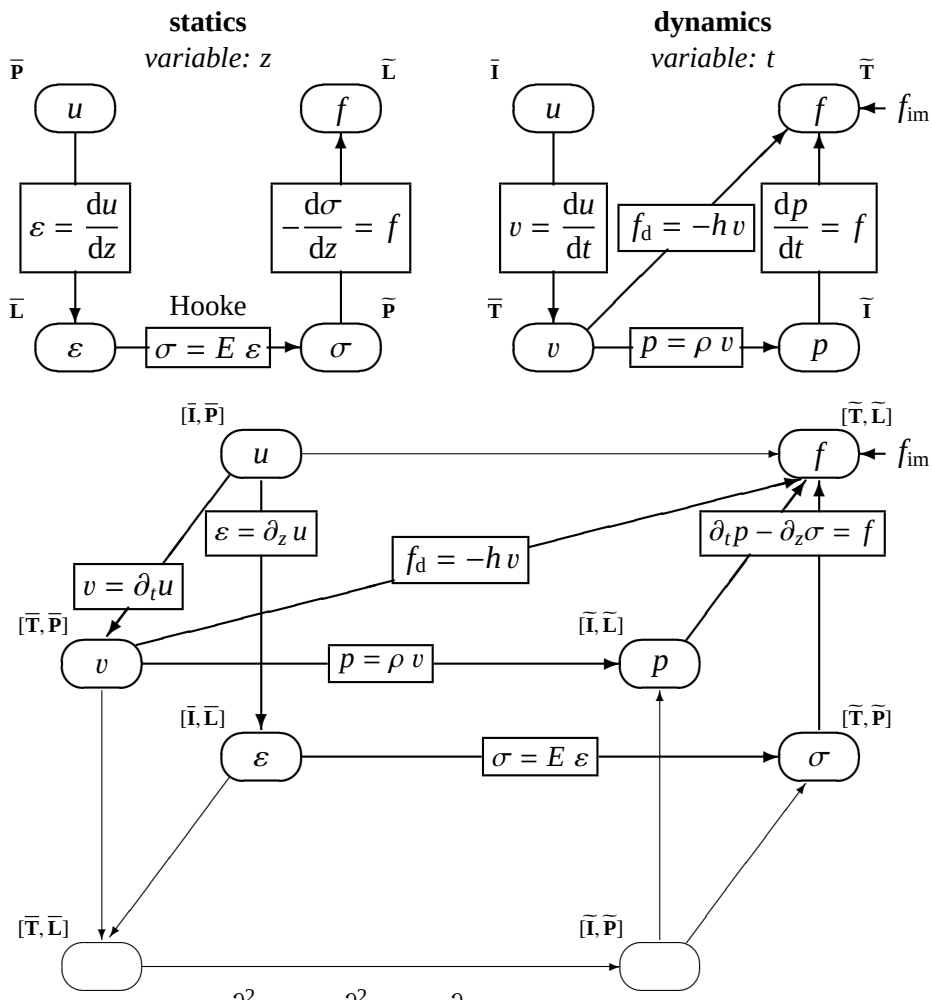

$$\rho\,\frac{\partial^2 u}{\partial t^2} - E\,\frac{\partial^2 u}{\partial z^2} + h\,\frac{\partial u}{\partial t} = f_{\mathrm{im}}$$

u	*displacement*	f	*axial body force / length*
ε	*strain*	f_{d}	*axial dissipative force / length*
v	*velocity*	f_{im}	*axial impressed force / length*
E	*elastic modulus*	σ	*stress*
ρ	*density*	p	*momentum / length*
h	*damping coefficient*		

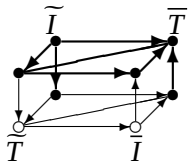

inserito

VBd1-5 (ex SMd14-4); http://discretephysics.dica.units.it see also VBd4 [Ref: Morse, Feshback. v.II, p.137]