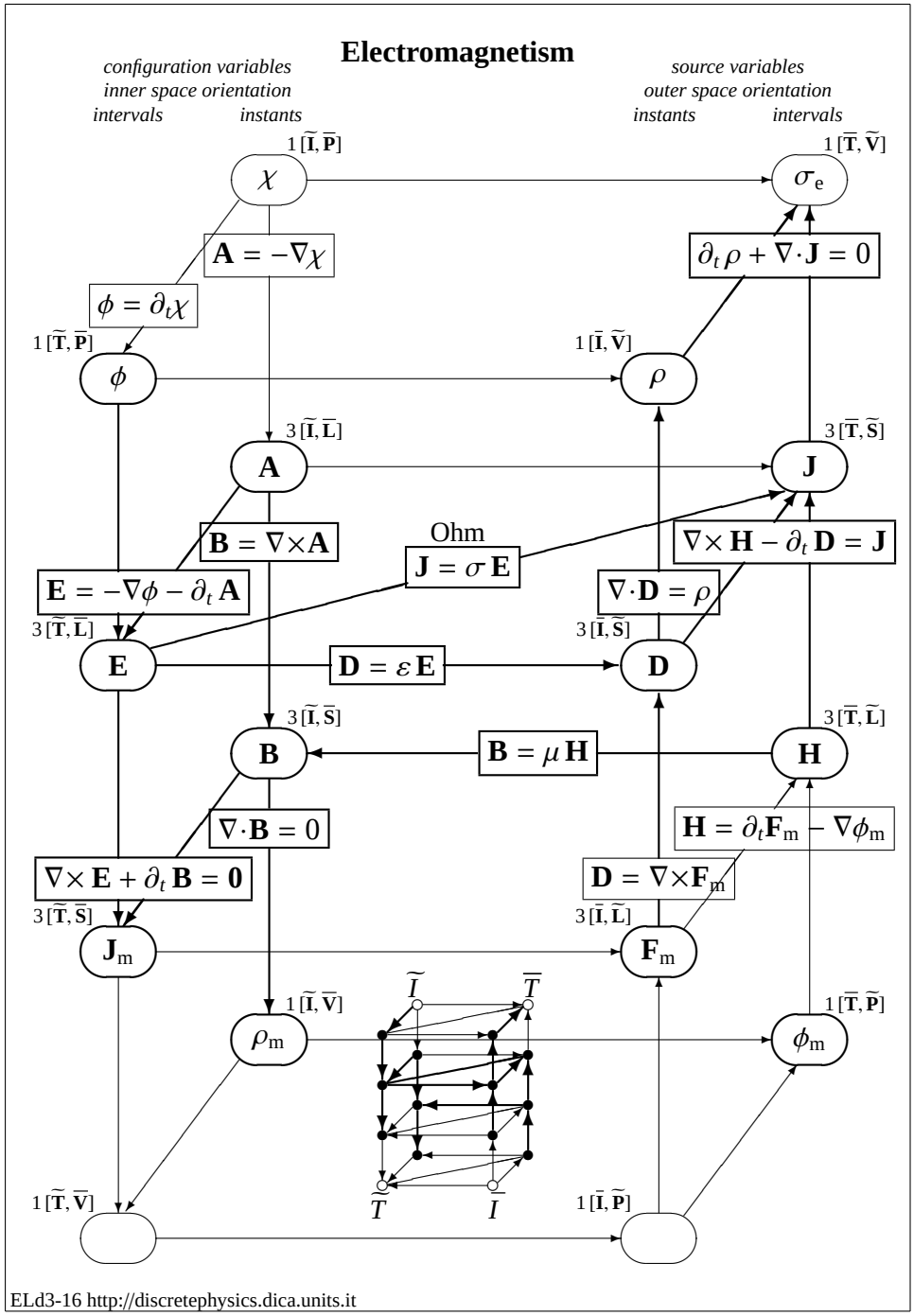
Electromagnetism
configuration variables
inner space orientation
intervals
instants
source variables
outer space orientation
instants
intervals
1 [Ĩ, P̄]
χ
1 [T̄, Ṽ]
σe
A = −∇χ
∂t ρ + ∇·J = 0
ϕ = ∂tχ
1 [T̃, P̄]
ϕ
1 [Ī, Ṽ]
ρ
3 [Ĩ, L̄]
A
3 [T̄, S̃]
J
B = ∇×A
Ohm
J = σ E
∇× H − ∂t D = J
E = −∇ϕ − ∂t A
∇·D = ρ
3 [T̃, L̄]
E
D = ε E
3 [Ī, S̃]
D
3 [Ĩ, S̄]
B
B = μ H
3 [T̄, L̃]
H
∇·B = 0
H = ∂t Fm − ∇ϕm
∇× E + ∂t B = 0
D = ∇×Fm
3 [T̃, S̄]
Jm
3 [Ī, L̃]
Fm
1 [Ĩ, V̄]
ρm
1 [T̄, P̃]
ϕm
1 [T̃, V̄]
1 [Ī, P̃]
ELd3-16 http://discretephysics.dica.units.it